Circuits Extra Practice
Physics 1251
TA: Brian Clark
10/13/2015

The following are the four "voltage rules" for Kirchoff's Laws:

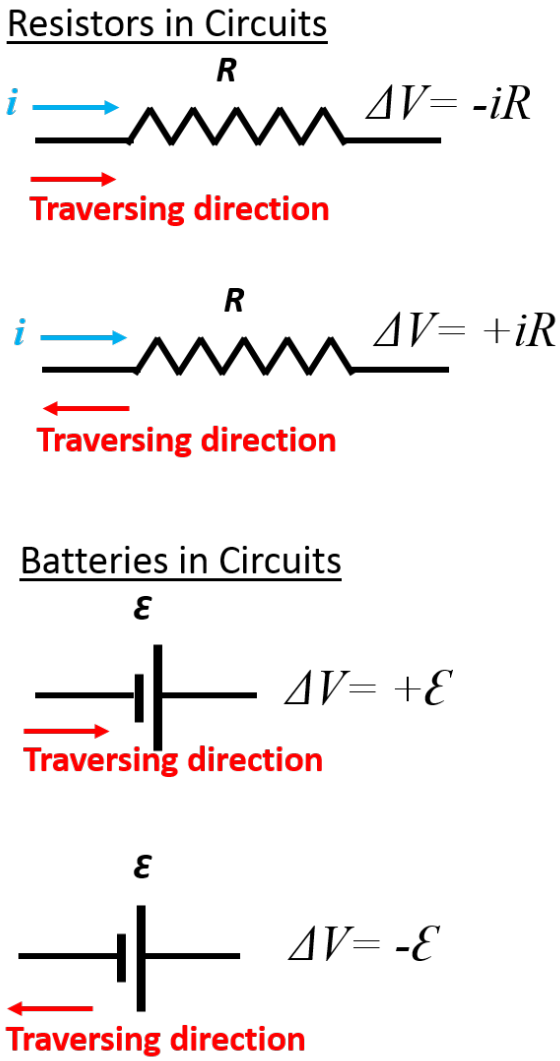

My advice with Kirchoff's law problems is to write down **TWO voltage loops**, and **ONE current conservation** statement. Then solve in whatever way seems most efficient. Often, this means using the current conservation to reduce the voltage equations to two equations with two unknown currents, and then applying elimination or substitution to finish the problem off.

1. The circuit shown as elements with the following values: $\mathscr{E}_1 = 3.0\,\mathrm{V}$, $\mathscr{E}_2 = 6.0\,\mathrm{V}$, $R_1 = 2.0\,\Omega$, and $R_2 = 4.0\,\Omega$. Find the currents i_1, i_2, i_3 in each of the three branches.

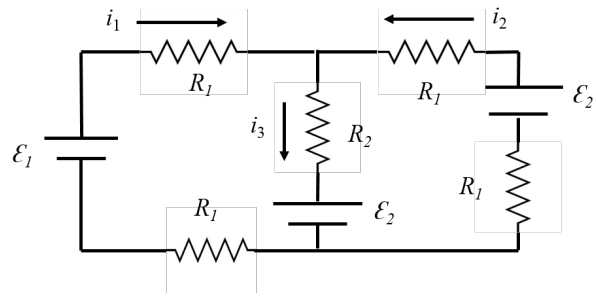

2. For the circuit shown, find the currents i_1, i_2, i_3 in each of the three branches.

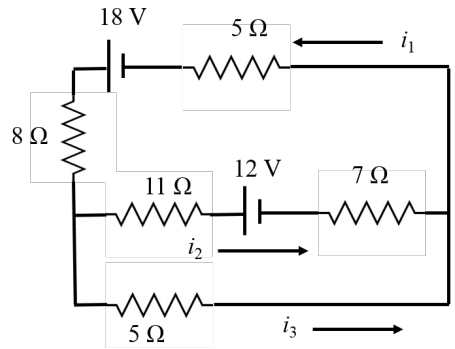
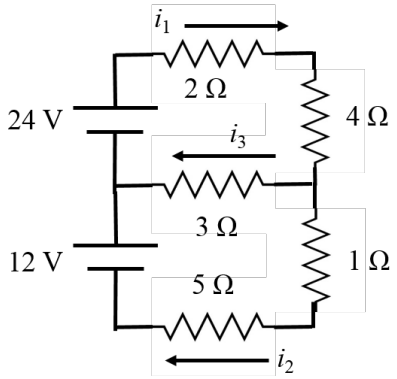
3. For the circuit shown, find the currents i_1, i_2, i_3 in each of the three branches.